20002-15415

| NO. | NAME | PART NO. | QTY | MATERIAL DIMENSION .DESCRIPTION |
|---|---|---|---|---|
| 1 | COMPRESSOR ASSY | 20102-07765 | 1 | UP-120 |
| 2 | MAGNETIC CLUTCH | 27201-00080 | 1 | ø132×AA×12V |

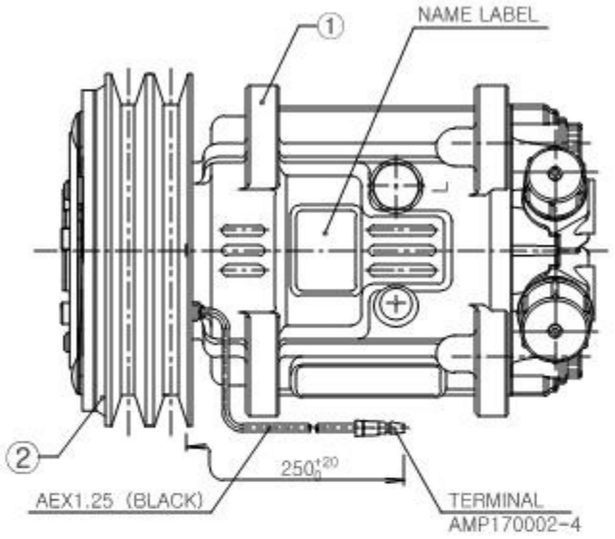


COMPRESSOR

| | |
|---|---|
| MODEL | UP-120 |
| PART NO. | 20102-07765 |
| DISPLACEMENT | 119cc/Rev. |
| REFRIGERANT | HFC-134a |
| MAX. RPM | 6000 rpm |
| FITTING TYPE | O-Ring type |
| LUBRICANT | UNIDAP 7(PAG) |
| INITIAL OIL CHARGE | 140cc |

MAGNETIC CLUTCH

| | |
|---|---|
| MODEL | ø132×AA |
| PART NO. | 27201-00080 |
| RATING | DC.12V,MAX.45W |
| REVOLUTION | CW |
| BELT TYPE | A |

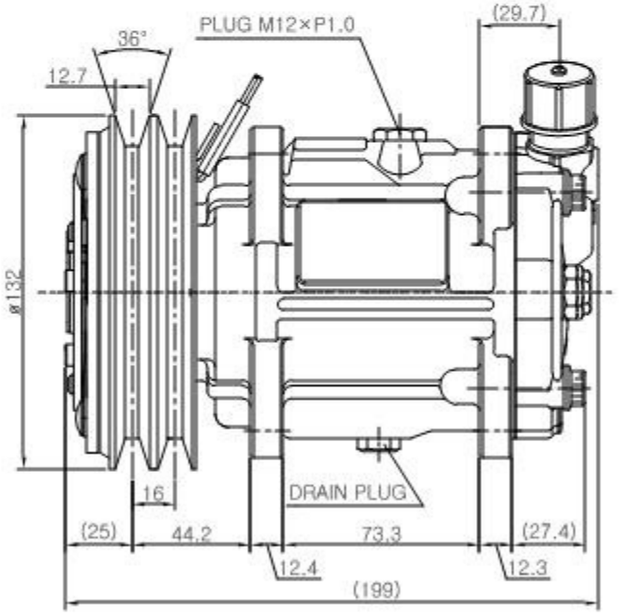


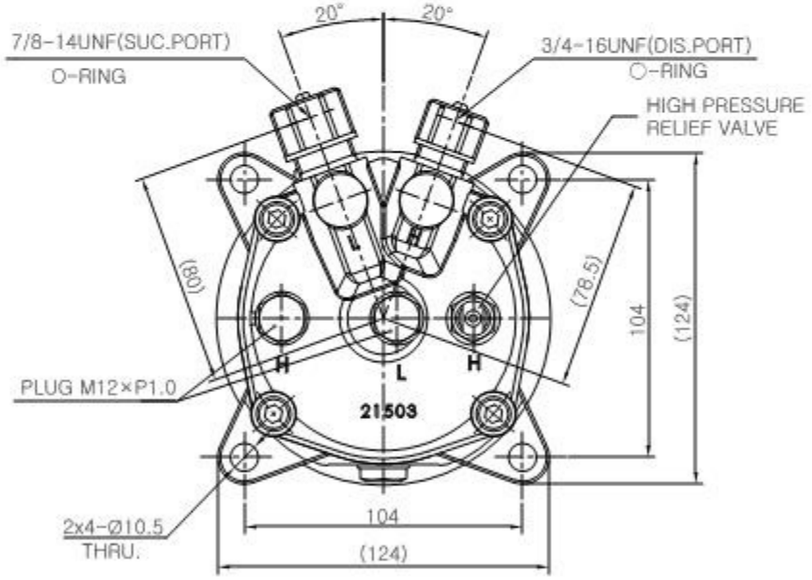


DC.12V

PAG OIL

HFC-134a

Article

1. $N_2$ gas(0.05-0.1MPa) is enclosed in the compressor inside. Therefore, please exclude a cap slowly so that internal oil is not scattered.